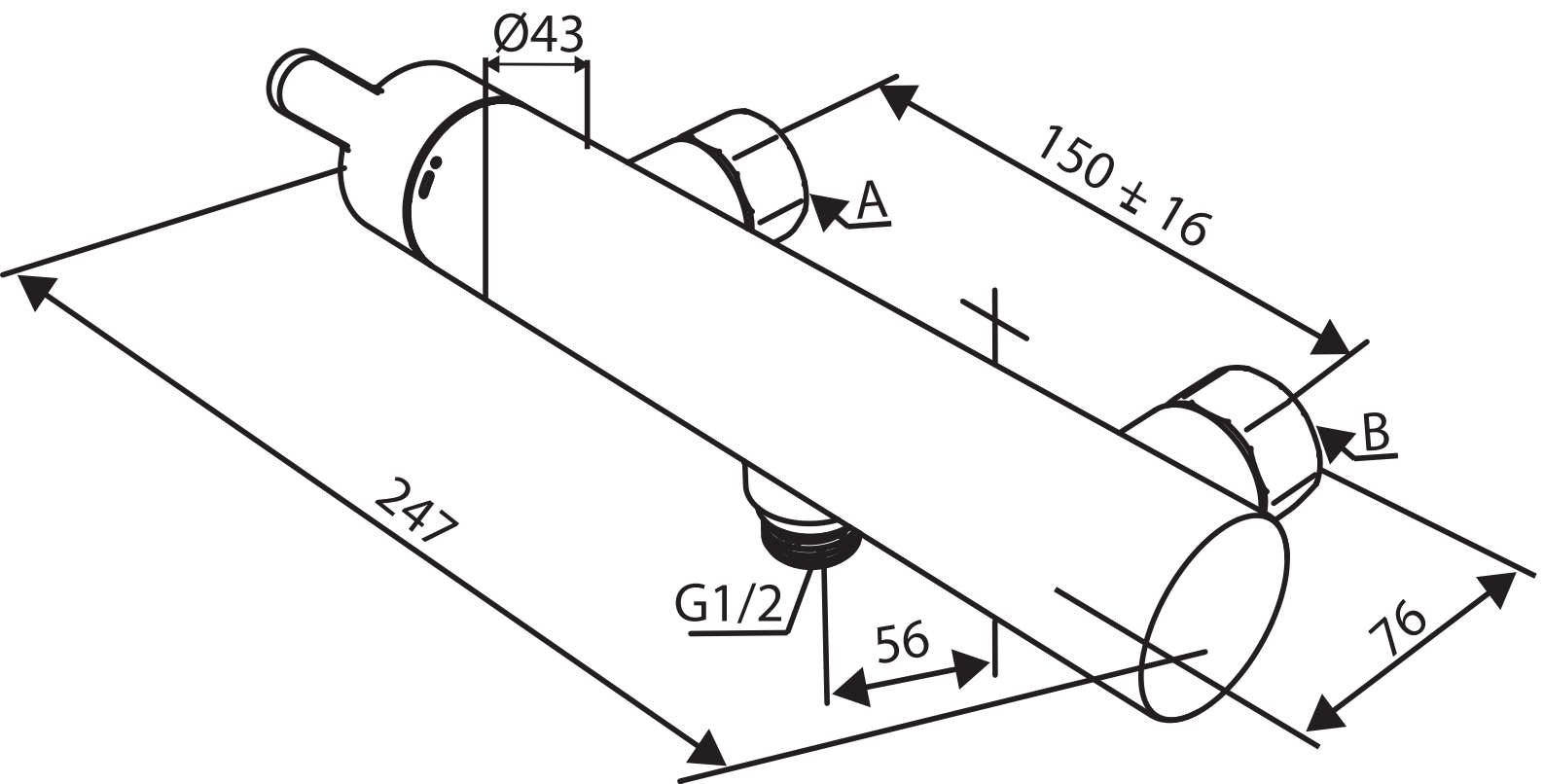
Ø43
A
150 ± 16
B
247
G1/2
56
76