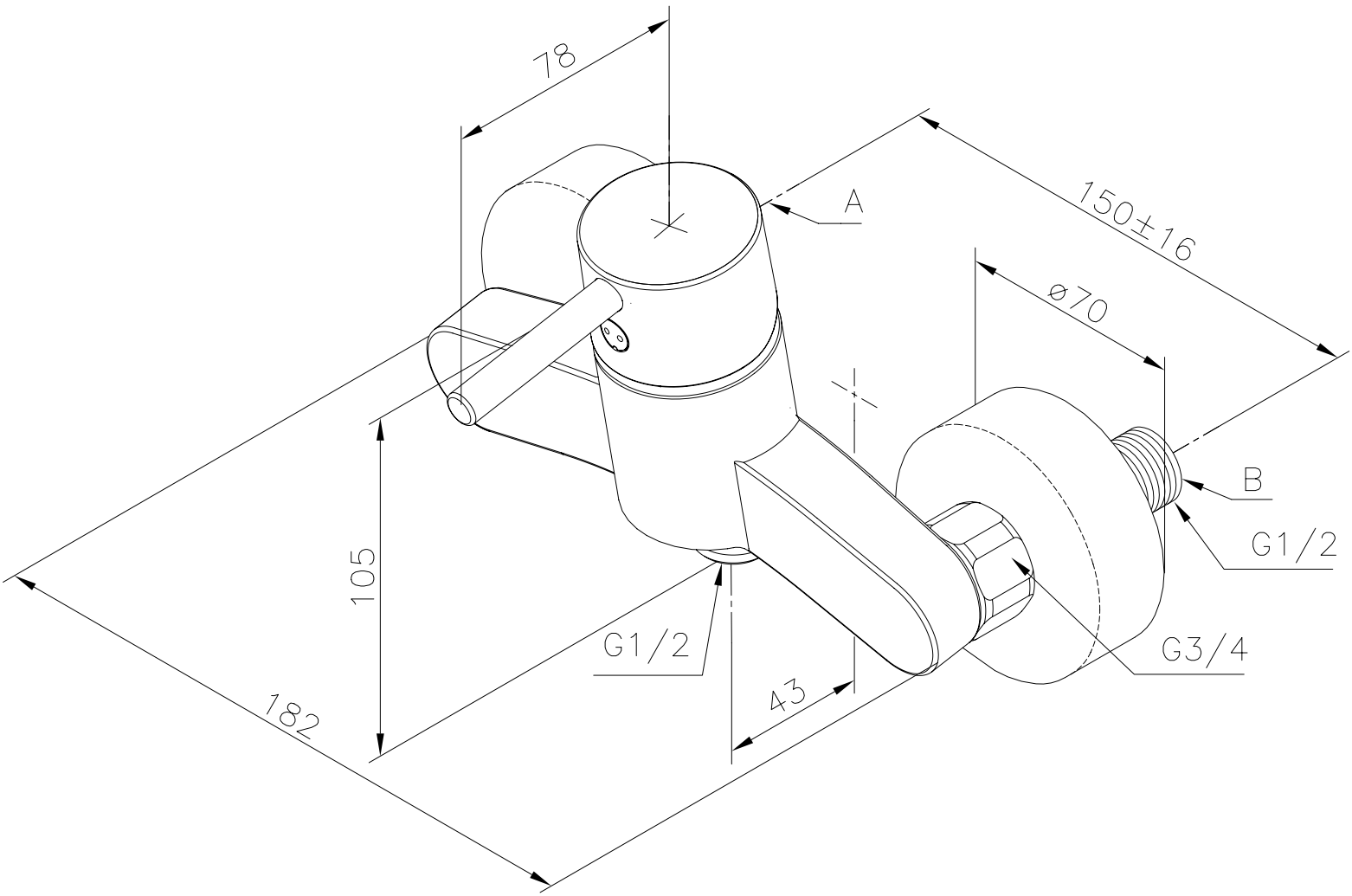
78
A
150±16
ø70
B
G1/2
105
G1/2
G3/4
43
182