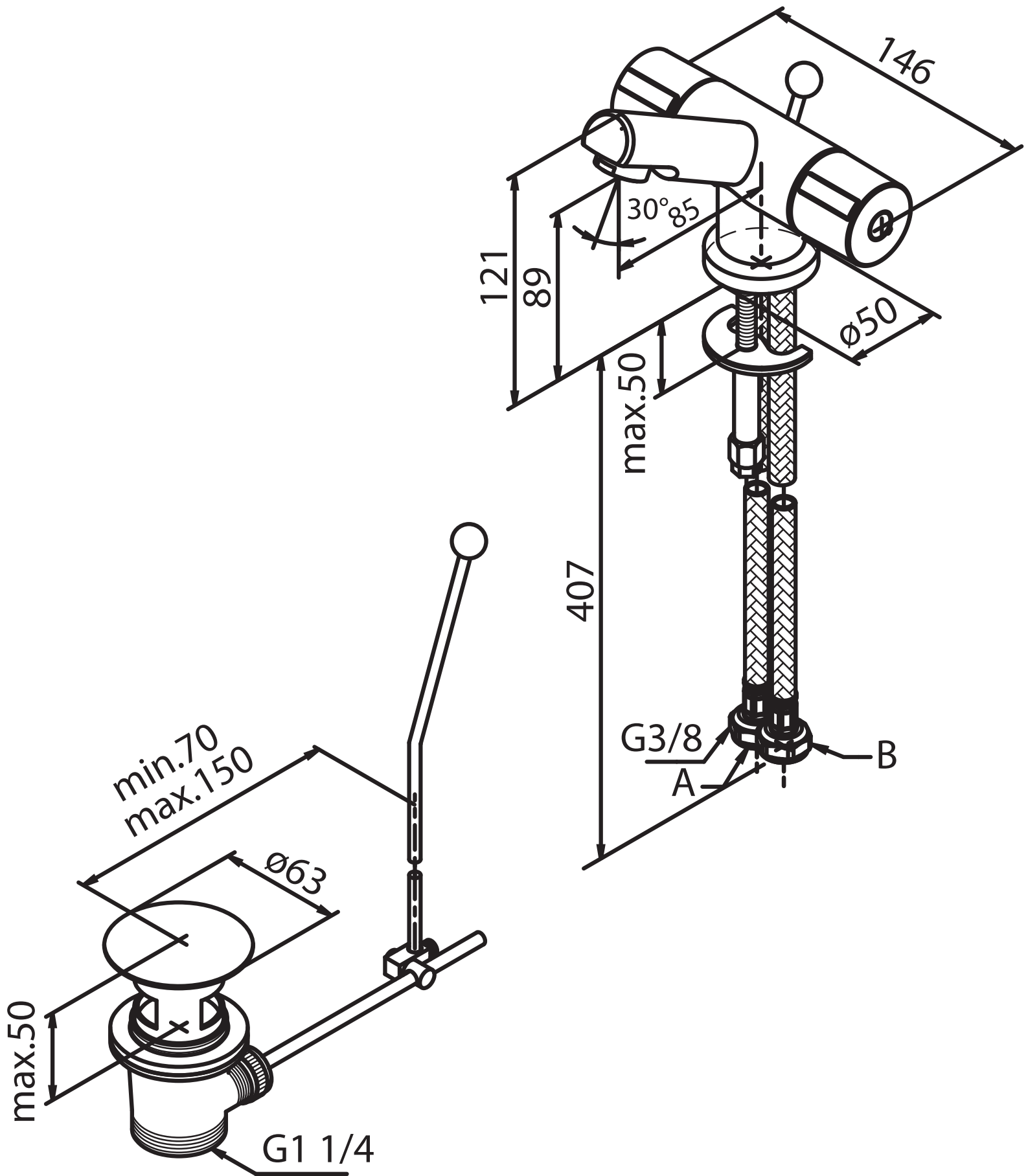
146
30°
85
121
89
ø50
max.50
407
G3/8
A
B
min.70
max.150
ø63
max.50
G1 1/4