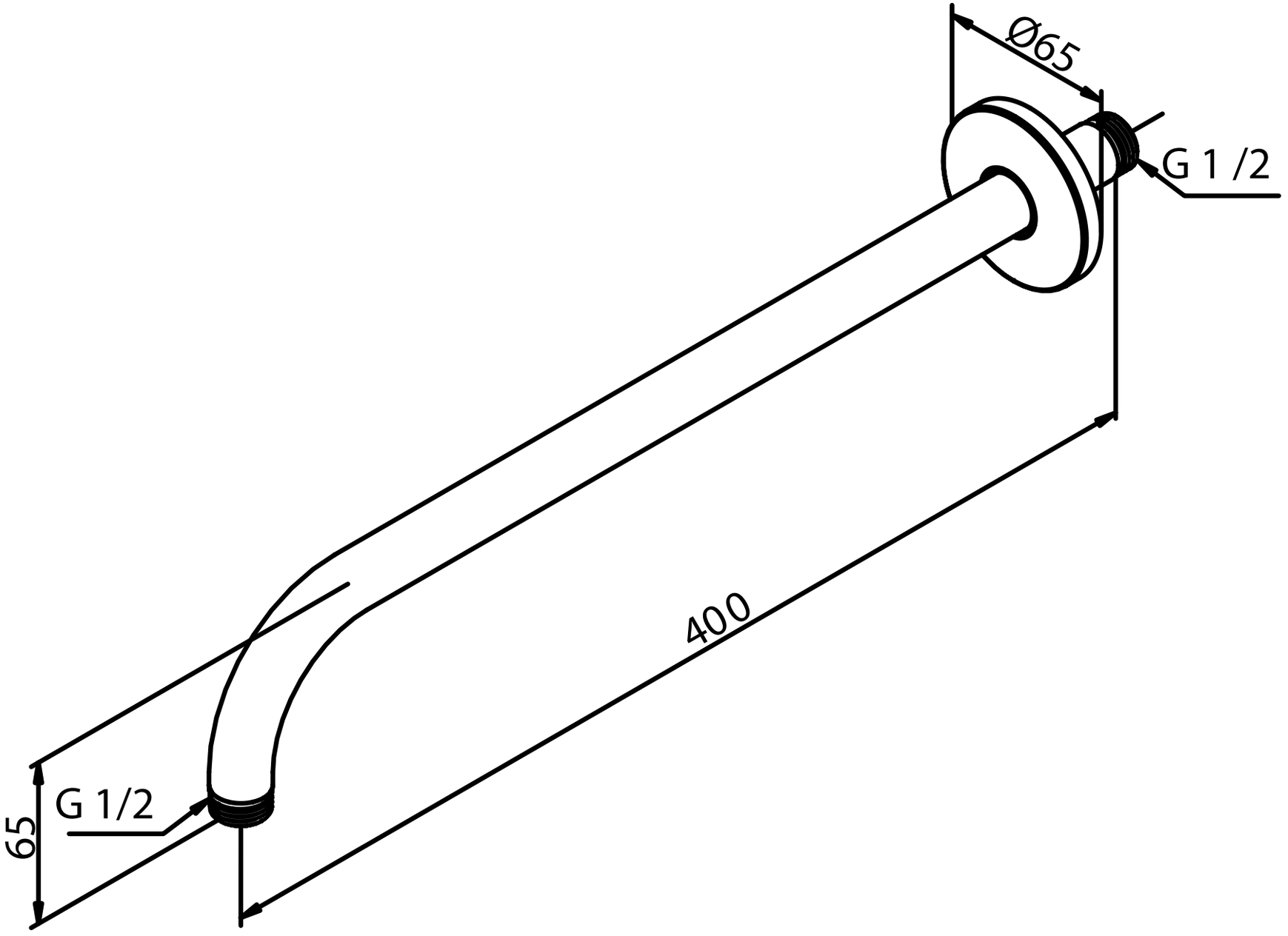
Ø65
G 1 /2
400
65
G 1/2

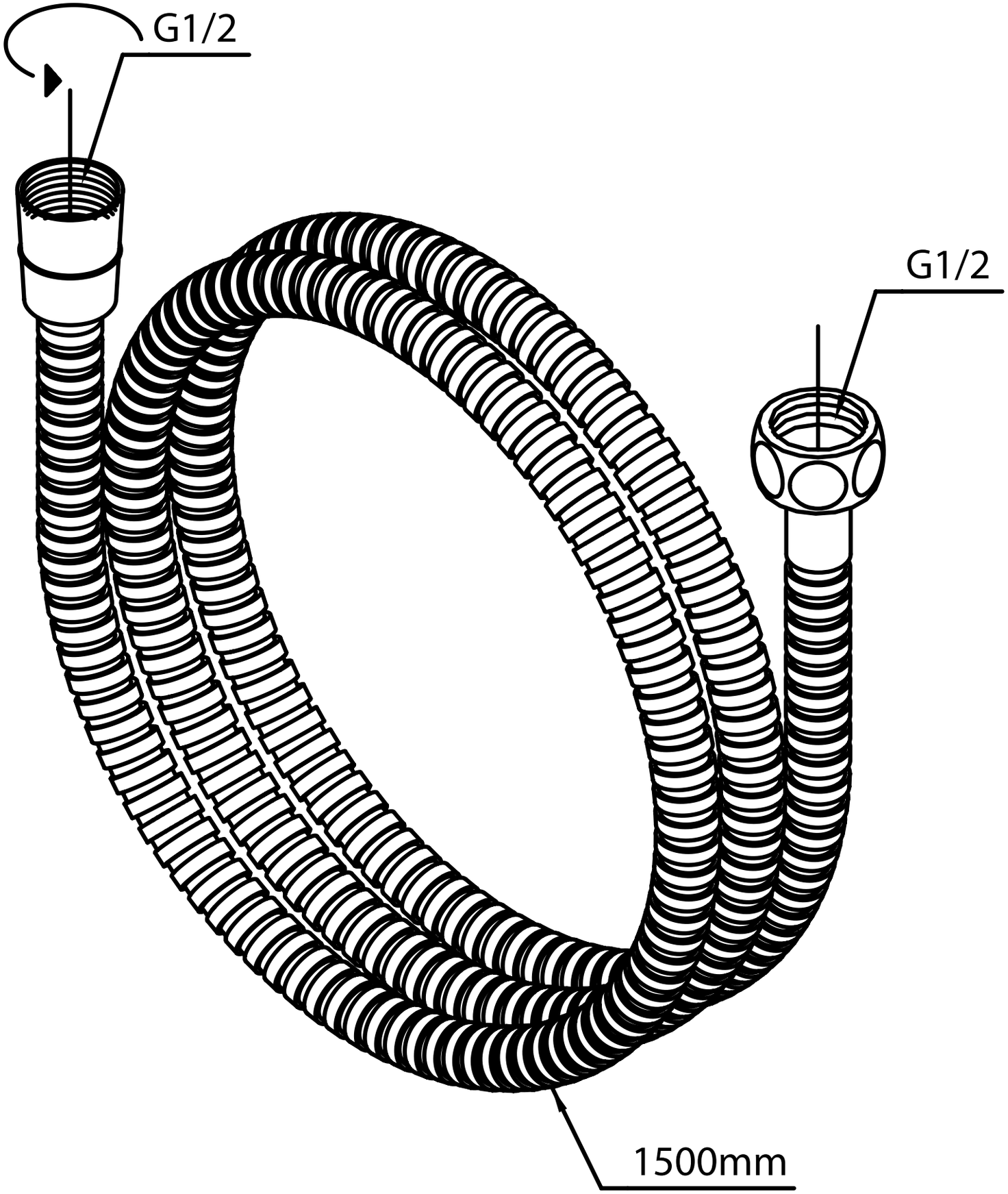
G1/2
G1/2
1500mm

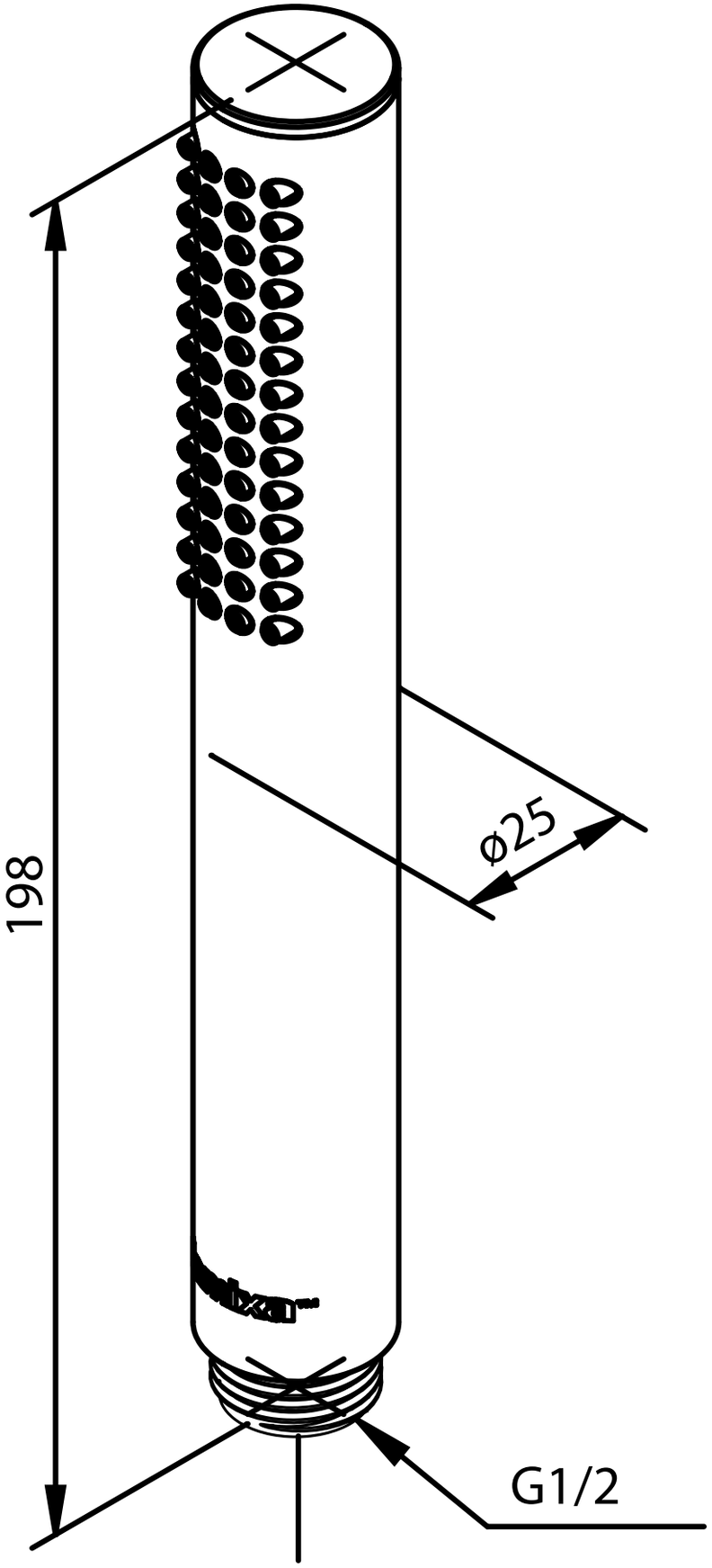
198
ø25
G1/2

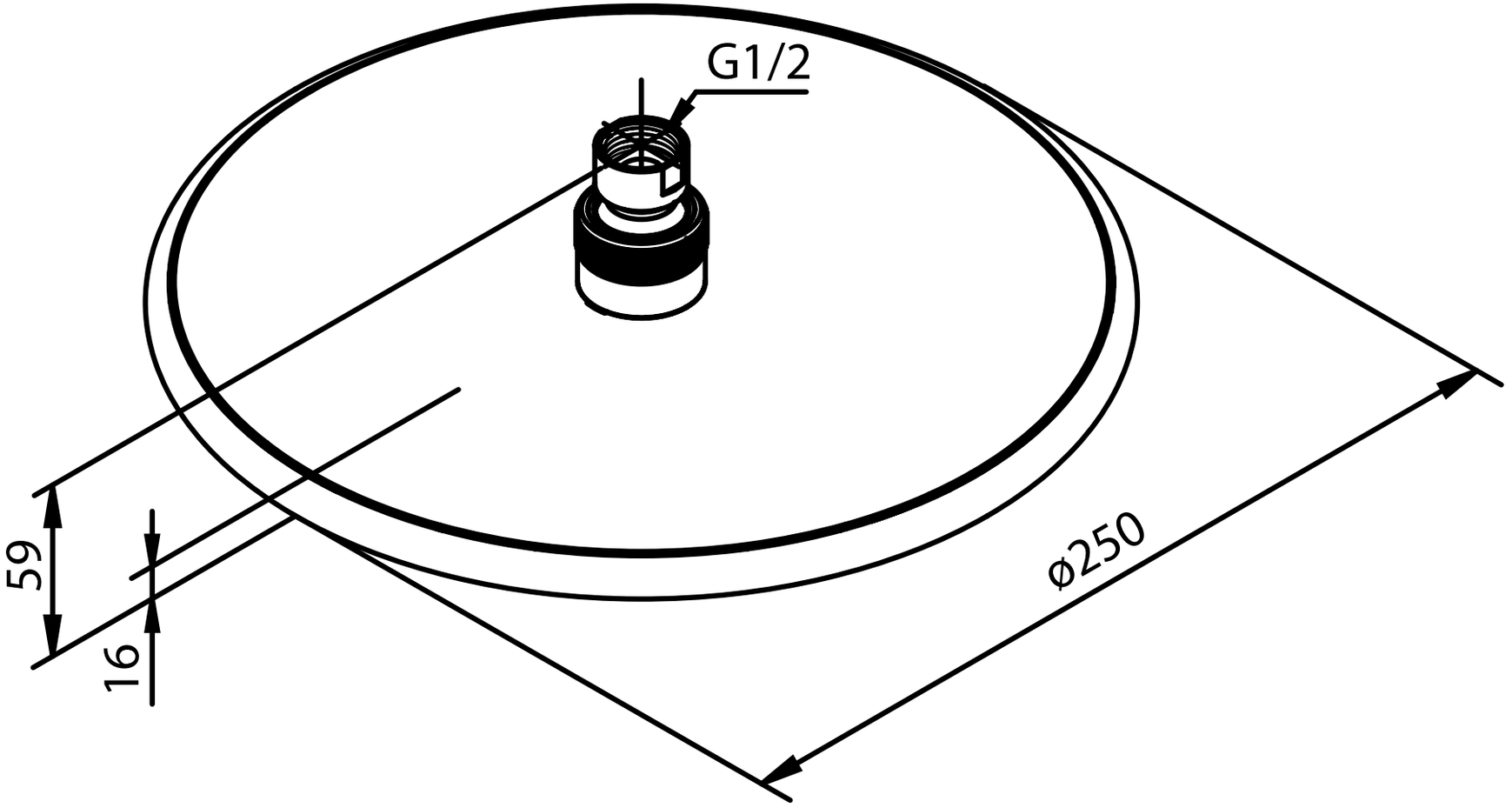
G1/2
59
16
ø250

202
min. 46/max. 76

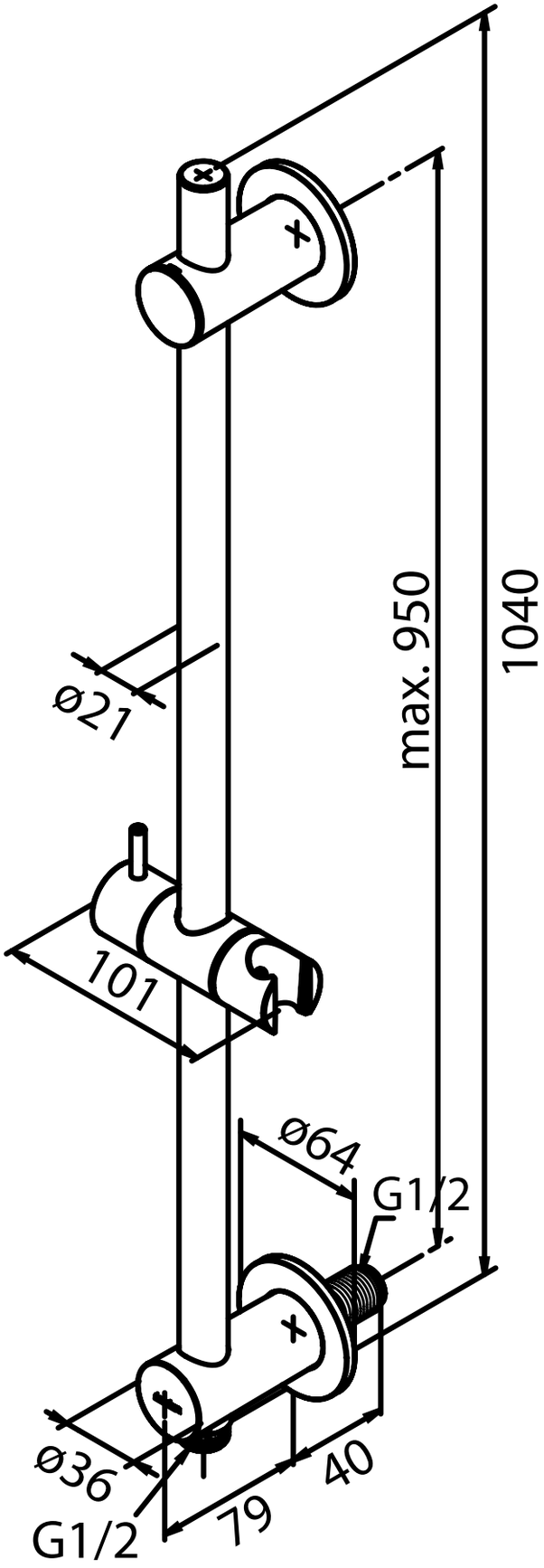
1040
max. 950
ø21
101
ø64
G1/2
ø36
G1/2
79
40