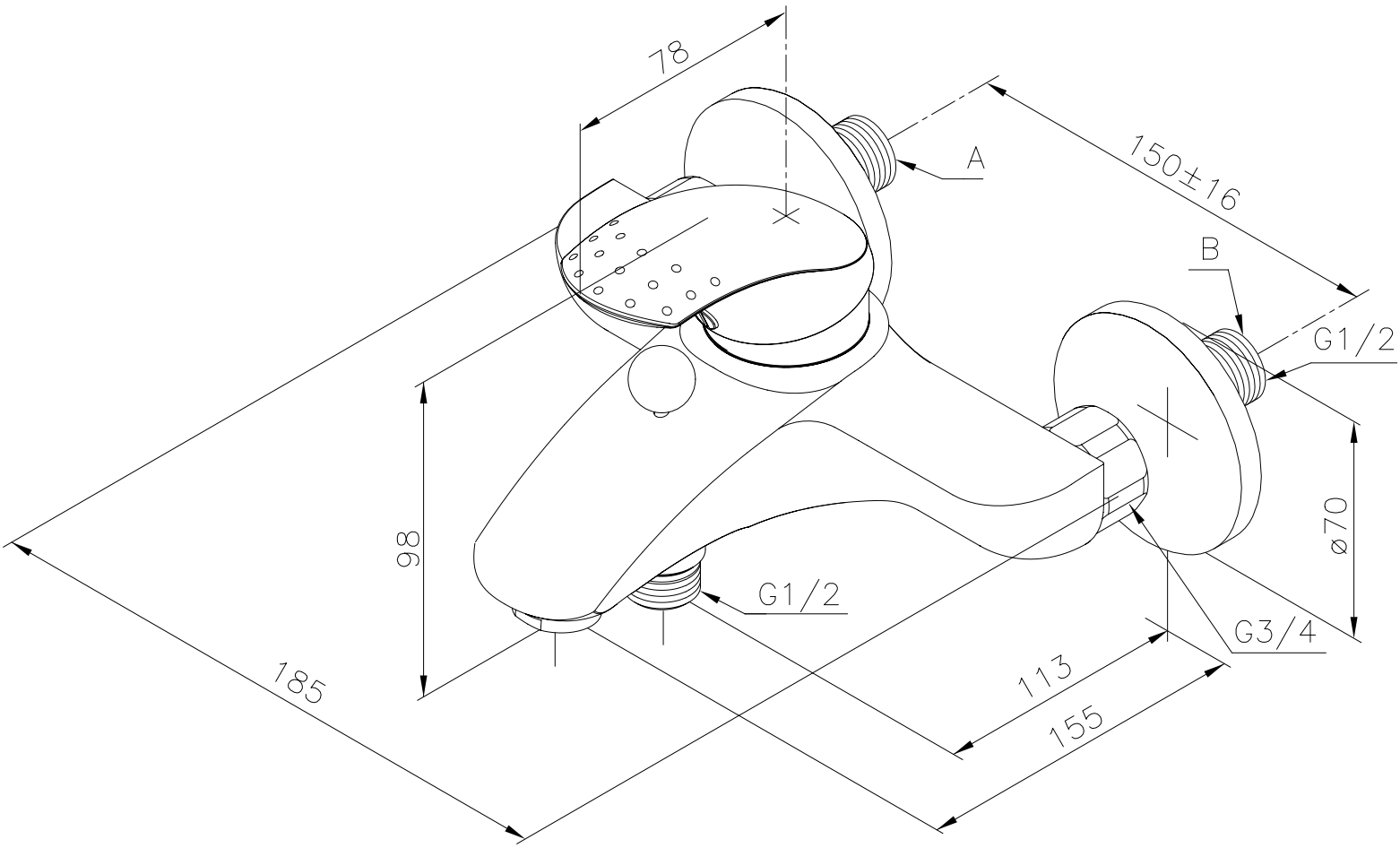
78
150±16
A
B
G1/2
98
G1/2
G3/4
ø70
185
113
155