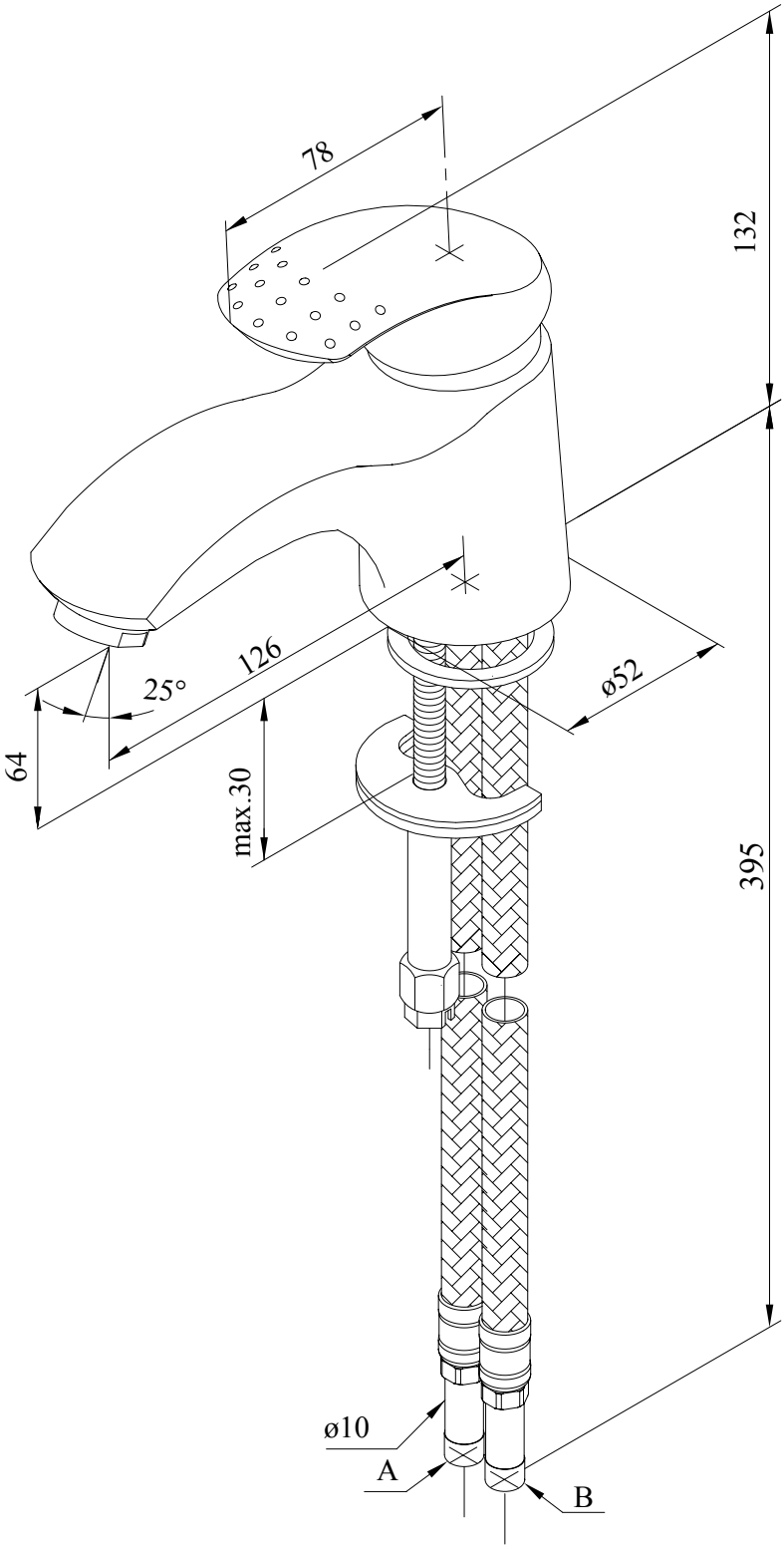
78
132
126
25°
64
max.30
ø52
395
ø10
A
B