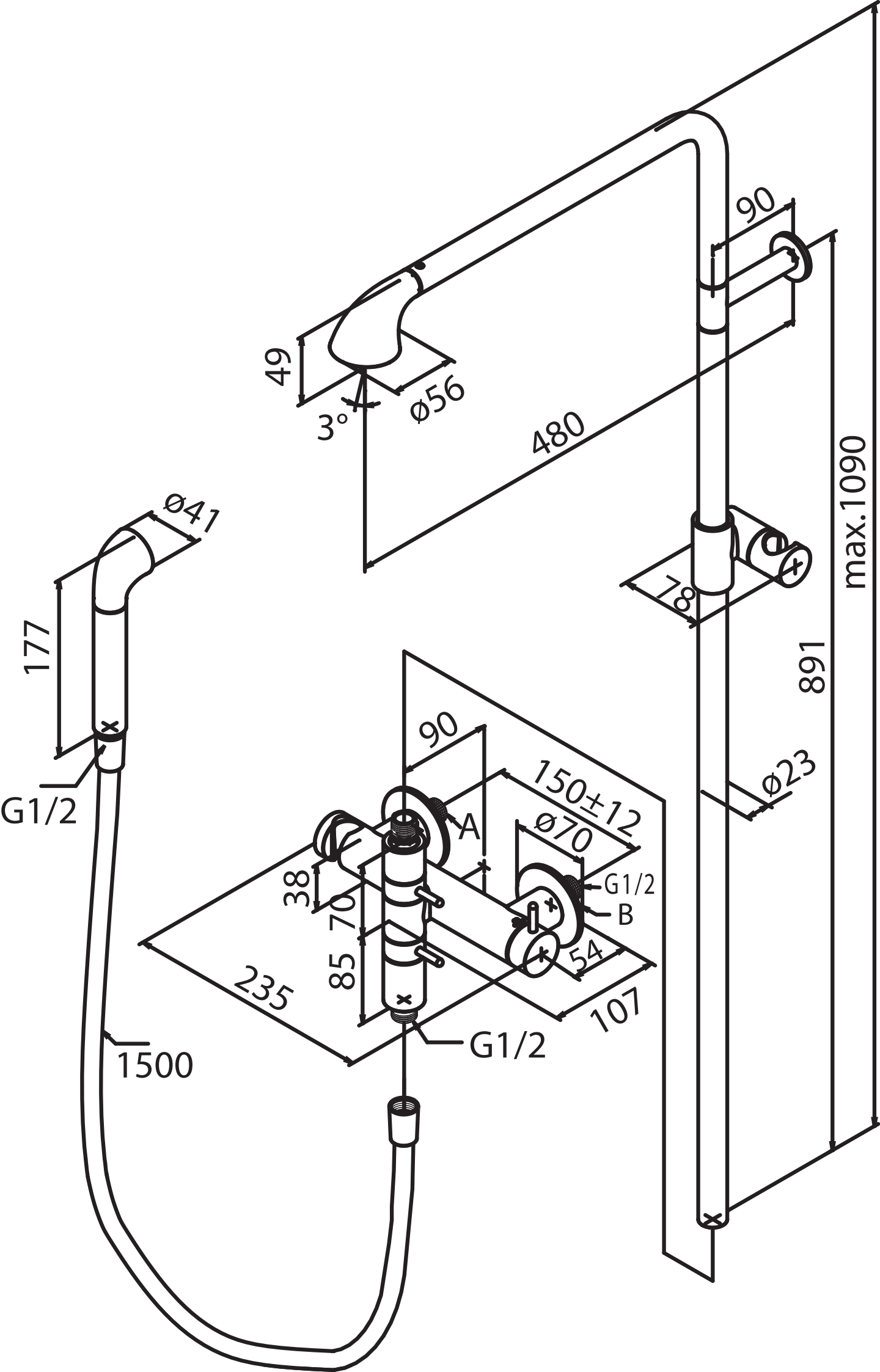

90
49
3°
ø56
480
max.1090
ø41
177
78
891
90
150±12
ø23
G1/2
A
ø70
38
G1/2
70
B
85
54
235
107
G1/2
1500