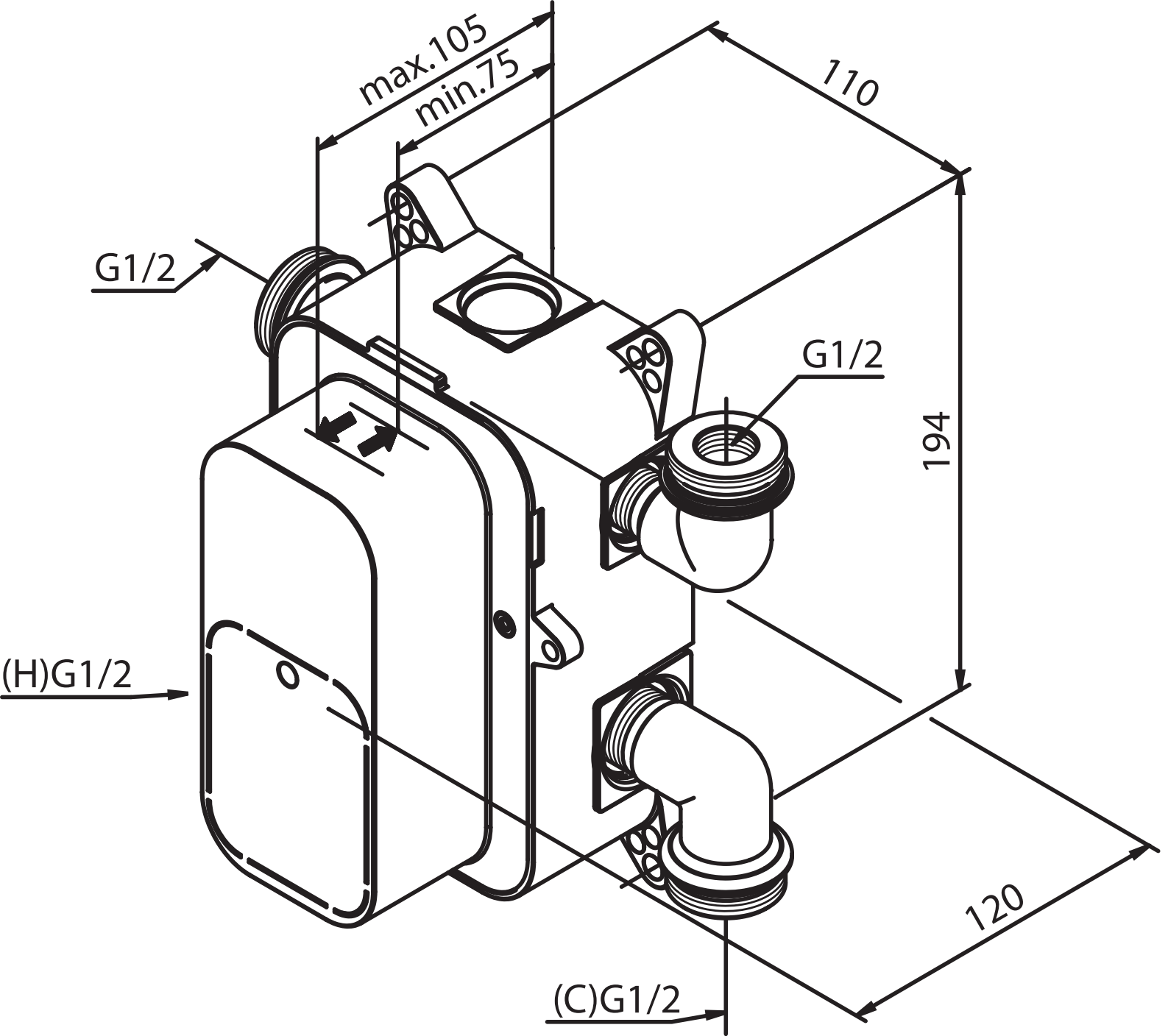
max.105
min.75
110
G1/2
G1/2
194
(H)G1/2
120
(C)G1/2